VITREOUS CHINA

TOILET
21-912

MAXWELL® 1.28 Elongated Toilet

12″ Rough-in

Features:

- 1.28 gpf/4.8 Lpf high efficiency two-piece toilet
- Elongated bowl
- Dual-fed siphon jet
- Pilot fill valve
- 3″ flush valve
- 2″ glazed trapway
- Color matched front tank lever (white only)
- Optional insulated non-sweating tank
- Optional right-handed trip lever
- Available in White, Bone and Biscuit
- 2 bolt caps

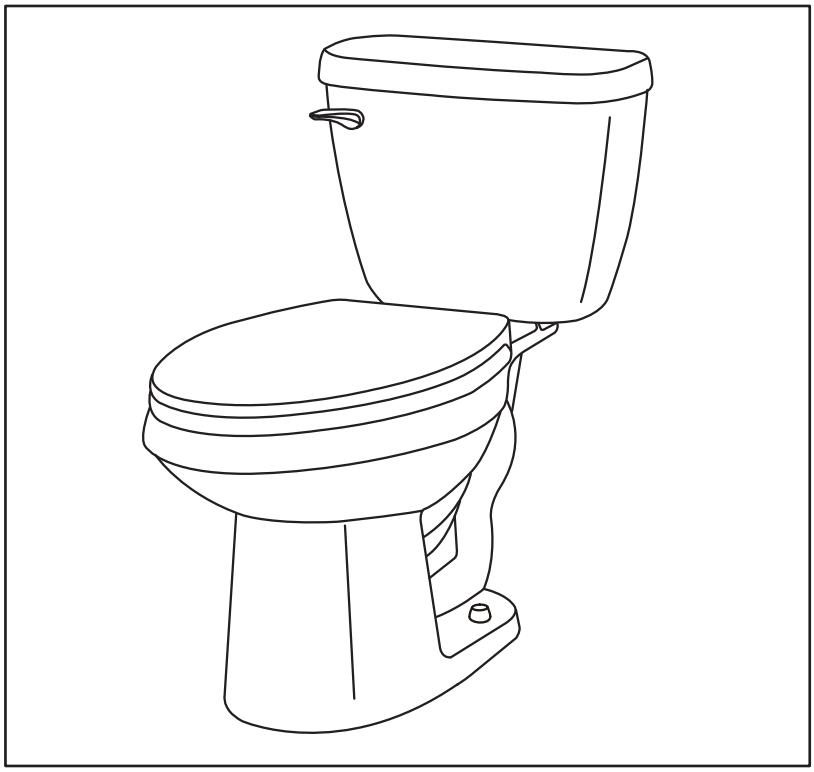

Specifications: *Bowl*—#21-962 Elongated Bowl *Tank*—#28-990
Seat not included

Dimensions:

Height	28″
Width	17 1/2″
Depth	28 1/8″
Rough-in	12″
Water Surface from Rim	5 7/8″
Trapway	2″
Water Surface	10 7/8″ x 7 1/2″
Water Seal	2 3/8″
Shipping Weight	79.5 lbs

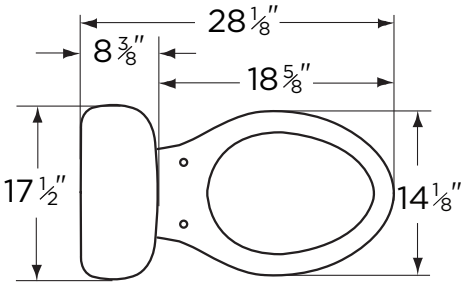

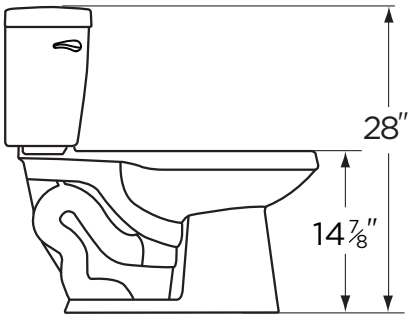

THIS FIXTURE QUALIFIES ACCORDING TO ASME TEST PROCEDURES AS A HIGH EFFICIENCY WATER CLOSET WITH AN AVERAGE CONSUMPTION OF 1.28 gpf (4.8 Lpf) OR LESS.

HIGH EFFICIENCY TOILET
HET

Job Name	
Date	
Model Specified	
Quantity	
Customer	
Contractor	
Architect/engineer	

www.gerberonline.com

Because we are committed to continual product improvement, specifications are subject to change without notice.

1.28 gpf (4.8 Lpf) MAXWELL® 1.28 TOILET

21-912
Elongated, 12″ Rough-in
(Bowl 21-962 with Tank 28-990)

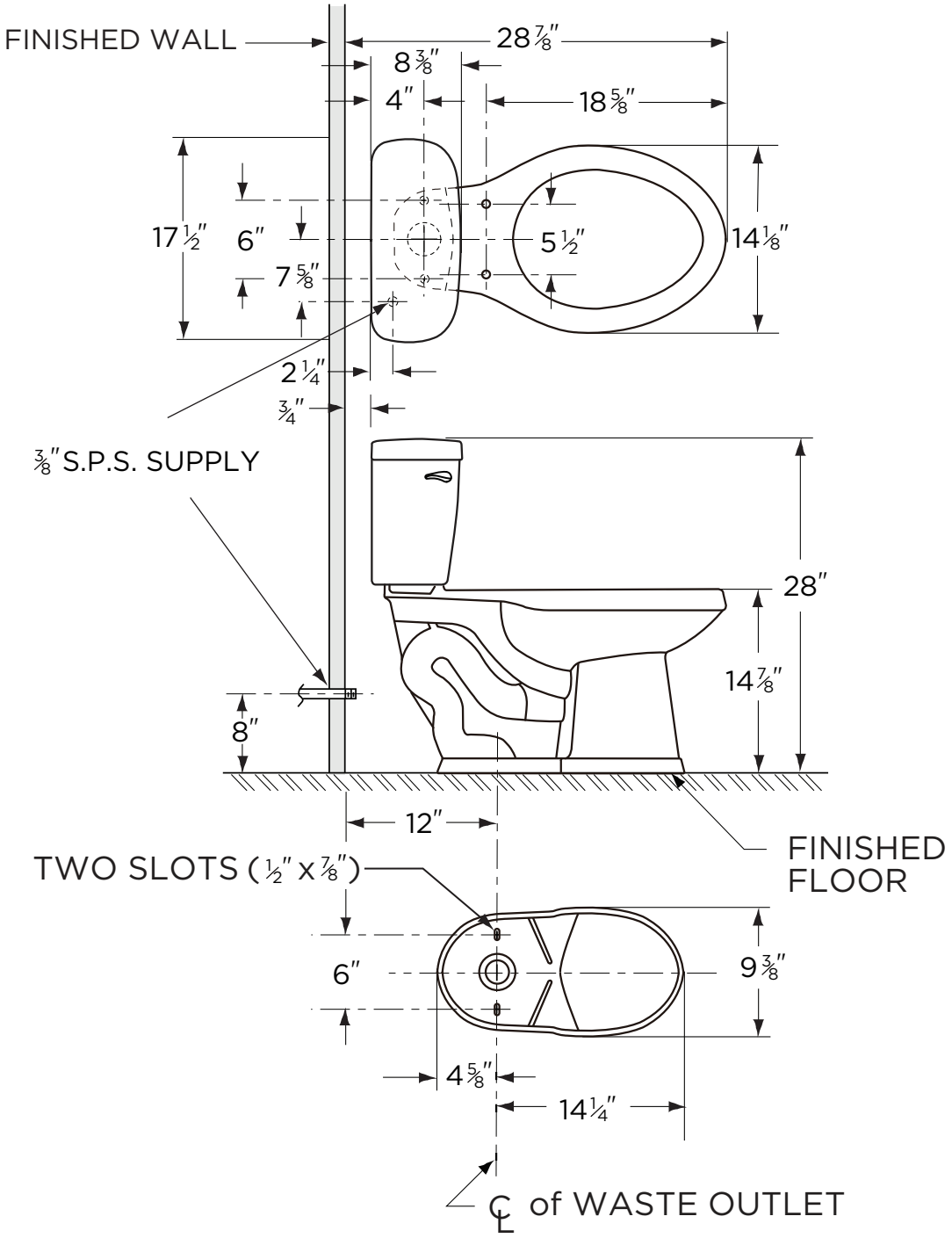

NOTES:
All dimensions are in inches.

Illustrations may not be drawn to scale.

IMPORTANT:
Dimensions of fixtures are nominal and may vary within the range of tolerances established by ASME Standard A 112.19.2.

THIS FIXTURE QUALIFIES ACCORDING TO ASME TEST PROCEDURES AS A HIGH EFFICIENCY WATER CLOSET WITH AN AVERAGE CONSUMPTION OF 1.28 gpf (4.8 Lpf) OR LESS.

RESIDENTIAL MOLDED WOOD TOILET SEAT

MODEL #	COLOR #
1500EC	WHITE

DESCRIPTION:

Closed front with cover, elongated, molded wood, multi-coat enamel finish toilet seat. Features two color-matched bumpers, color-matched Easy•Clean & Change® hinges with non-corrosive, top-tightening bolts and wing nuts.

SPECIFICATIONS:

Size:	Elongated
Material:	Molded Wood
Style:	Closed Front with Cover
Bumpers:	Two
Hinges:	Plastic Easy•Clean & Change®
Fastening System:	Non-Corrosive Bolts and Wing Nuts

FEATURES:

Easy•Clean & Change®

Non-Corrosive Bolts and Wing Nuts

PLASTIC EASY•CLEAN & CHANGE® HINGES

TWIST HINGES TO UNLOCK

EASY REMOVAL OF SEAT FOR THOROUGH CLEANING

NON-CORROSIVE BOLTS AND WING NUTS

DIMENSIONS:

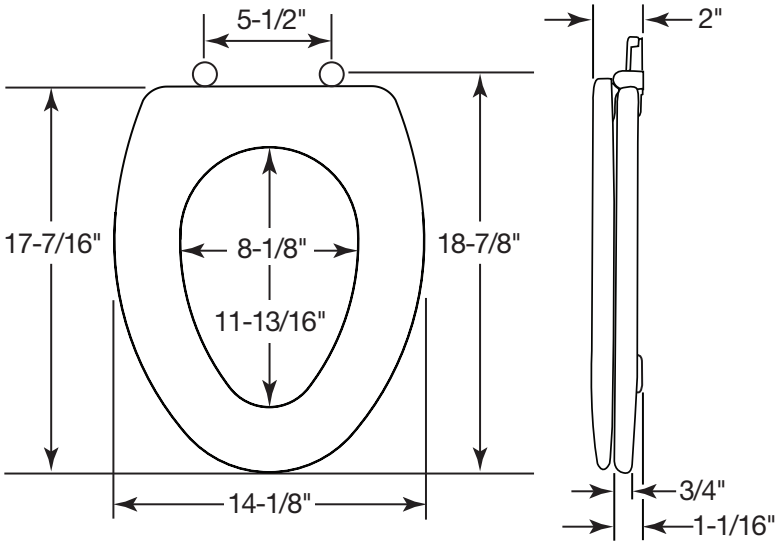

Proudly Made in the USA

Bemis Manufacturing Co., Sheboygan Falls, WI 53085
www.ToiletSeats.com

Phone: 800-558-7651 Fax: 800-292-3647